DOG EAR FENCE

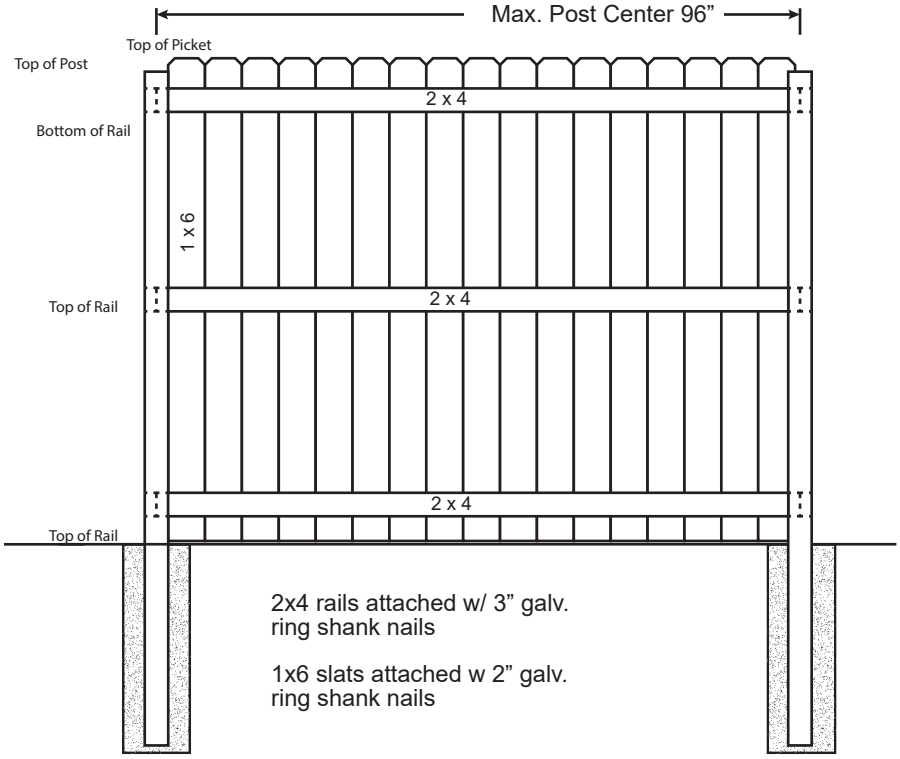

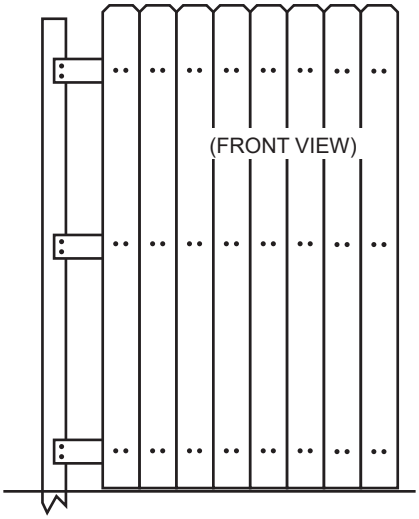

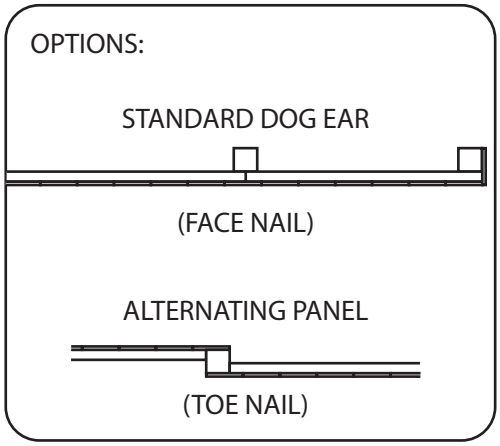

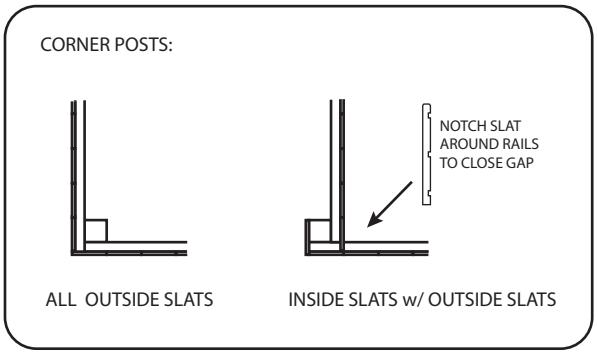

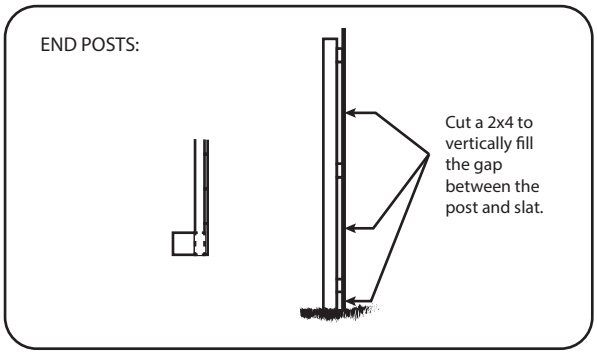

FENCES & DECKS
www.fenceanddeckutah.com
SLC 801-990-6888
PROVO 801-374-6428